2. Starter

A: REMOVAL

1) Disconnect the ground cable from the battery.

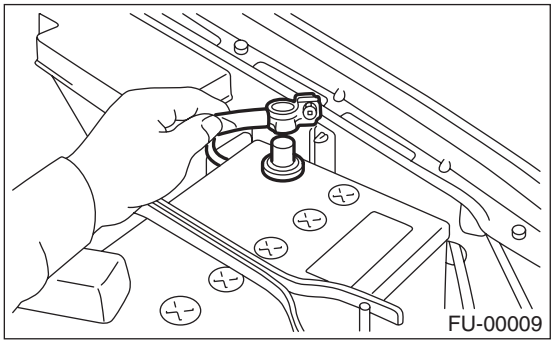

2) Remove the air intake chamber. (Non-turbo model) <Ref. to IN(H4SO)-6, REMOVAL, Air Intake Chamber.>
3) Remove the intercooler. (Turbo model) <Ref. to IN(H4DOTC)-13, REMOVAL, Intercooler.>
4) Remove the air intake chamber stay. (Non-turbo model)

- MT model

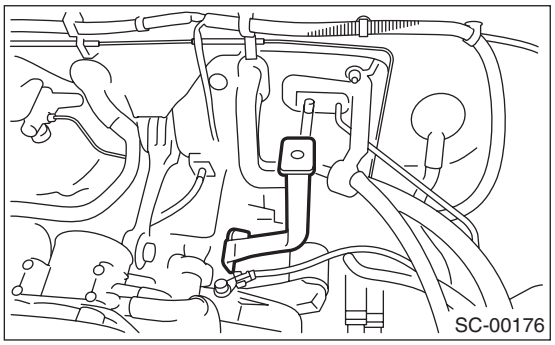

- AT model

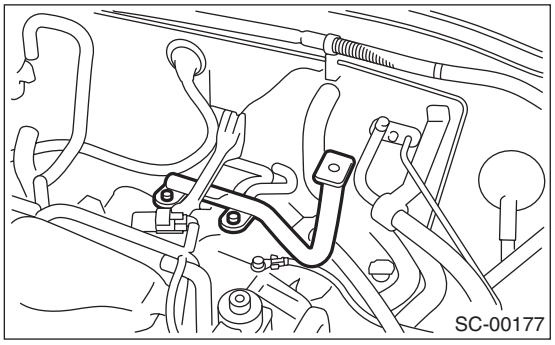

5) Disconnect the connector and terminal from starter.

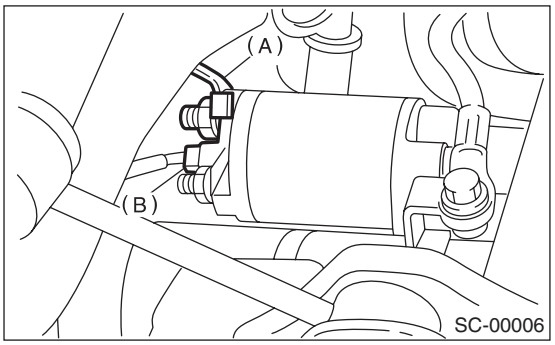

(A) Terminal
(B) Connector

6) Remove the starter from transmission.

NOTE:
For the MT model, a bolt is used in place (A).

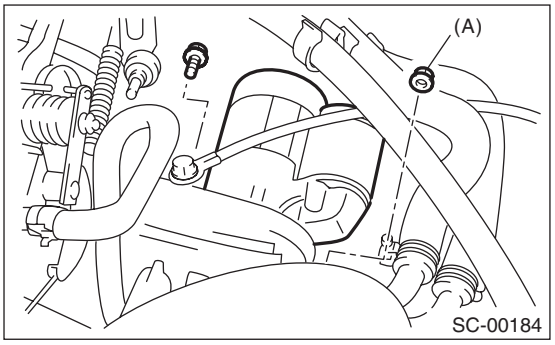

B: INSTALLATION

Install in the reverse order of removal.

NOTE:
For the MT model, a bolt is used in place (A).

Tightening torque:
50 N·m (5.1 kgf-m, 37 ft-lb)

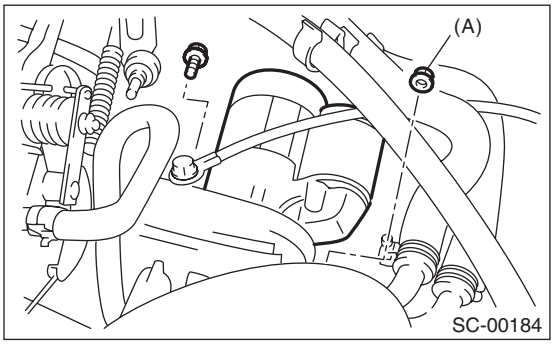

C: DISASSEMBLY

1. STARTER ASSEMBLY

1) Loosen the nuts fastening the switch assembly terminal M, then disconnect the connector.
2) Remove the bolts fastening the switch assembly, then remove the switch assembly, plunger and plunger spring as a unit from the starter.

NOTE:
Be careful because the pinion gap adjustment washer may sometimes be used on the mounting surface of the switch assembly.

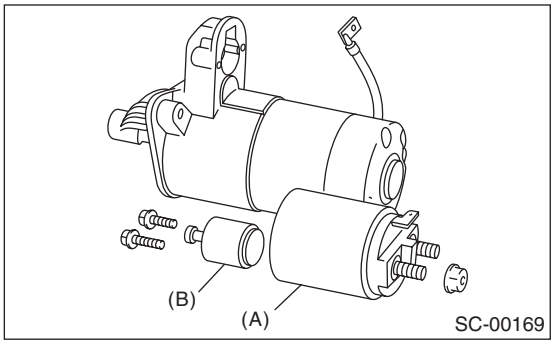

(A) Magnet switch ASSY
(B) Plunger

3) Remove the bolts passing through both sides, and the brush holder screws, then remove rear cover and brush holder.

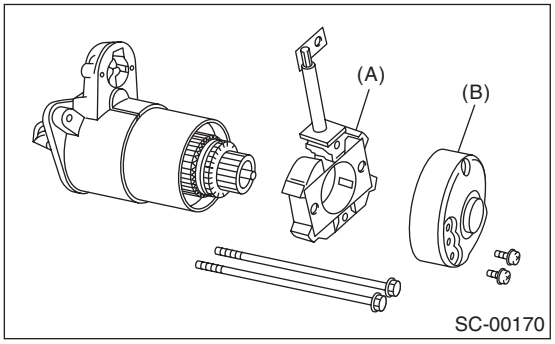

(A) Brush holder
(B) Rear cover

4) Remove the armature and yoke assembly from the front bracket. The ball used as a bearing will come off from the armature end.

NOTE:
Before removing the yoke, put alignment marks on the yoke assembly and front bracket.

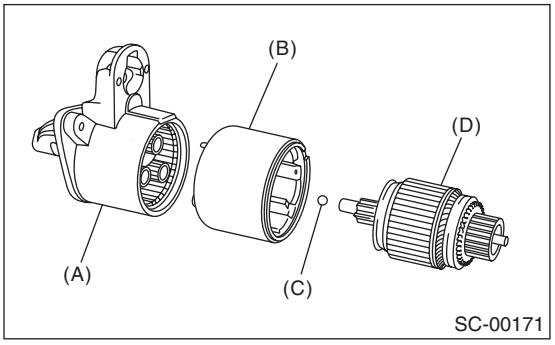

(A) Front bracket
(B) Yoke ASSY
(C) Ball
(D) Armature

5) Remove the gasket A, planetary gears, gasket B and plate.

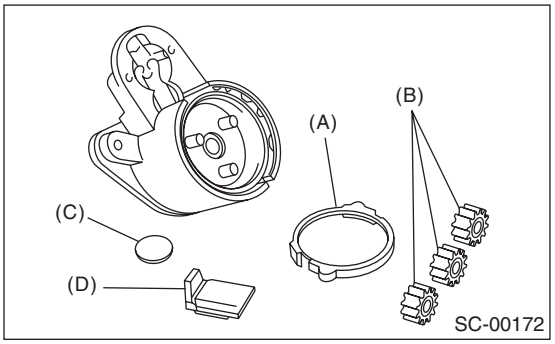

(A) Gasket A
(B) Planetary gear
(C) Plate
(D) Gasket B

6) Remove the shaft assembly and overrunning clutch as a unit.

NOTE:
Note the direction of the lever before removing.

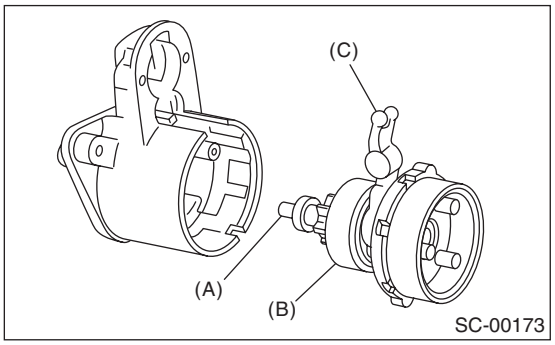

(A) Shaft ASSY
(B) Overrunning clutch
(C) Lever

7) Use the following procedures to remove the overrunning clutch from the shaft assembly.
(1) Use the appropriate tool (such as the right size of socket wrench) to lightly tap on the stopper to remove it from the ring.
(2) Remove the ring, spacer, and clutch from the shaft.

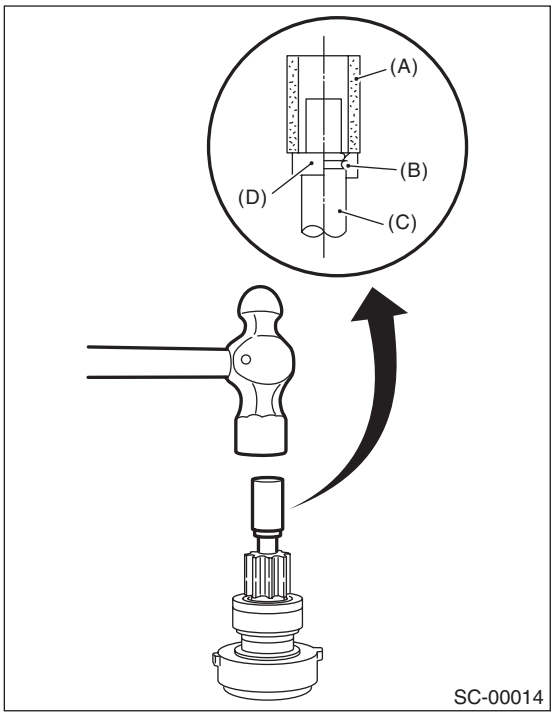

(A) Socket wrench
(B) Ring
(C) Shaft
(D) Stopper

2. BRUSH HOLDER

NOTE:
Only the brush holder of turbo MT model and STI model starter can be disassembled.
Slightly open the metal fitting while holding the insulating plate against the brush holder. Remove the insulating plate.
The brush and spring can be easily removed from the brush holder at this time.

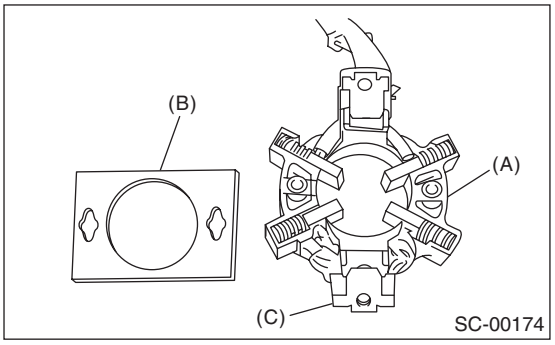

(A) Brush holder
(B) Insulating plate
(C) Metal fitting

D: ASSEMBLY

1) Assemble in the reverse order of disassembly.
2) Apply grease to the following parts before assembly.
- Front and rear bracket sleeve bearings
- Armature shaft gear
- Outer periphery of plunger
- Mating surfaces of plunger and lever
- Gear shaft splines
- Mating surfaces of lever and clutch
- Ball at armature shaft end
- Planetary gear

E: INSPECTION

1. ARMATURE

1) Check the commutator for signs of seizure or stepped wear caused by roughness of the surface. If there is light wear, use sandpaper to repair.
2) Run-out test
Check for run-out on the commutator. If excessive, replace it.

Commutator run-out:
Standard
0.05 mm (0.0020 in)
Service limit
0.10 mm (0.0039 in) or less

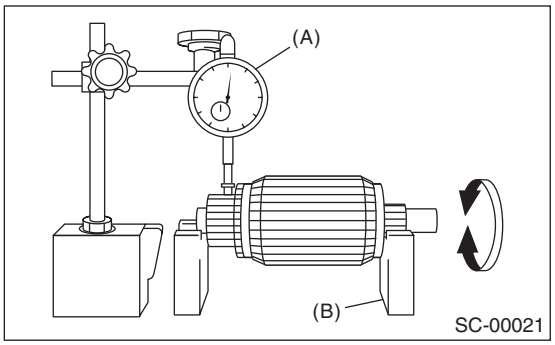

(A) Dial gauge
(B) V-block

3) Depth of segment mold
Check the depth of the segment mold.

Depth of segment mold:
0.5 mm (0.020 in)

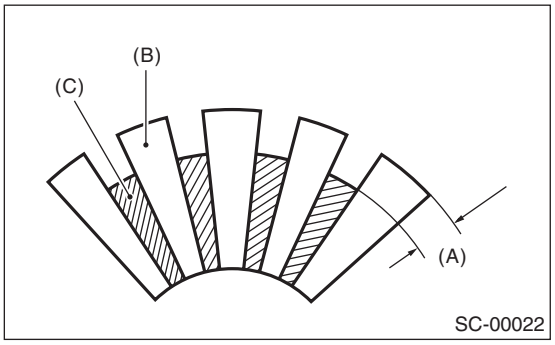

(A) Depth of mold
(B) Segment
(C) Mold

4) Armature short-circuit test
Place the armature on the growler tester to check for short circuits. While slowly turning the armature, support the steel seat for the armature core. If the circuit of the armature is shorted, the steel seat will vibrate, causing it to move towards the core. When the steel seat has moved or vibrated, replace or repair the armature with the shorted circuit.

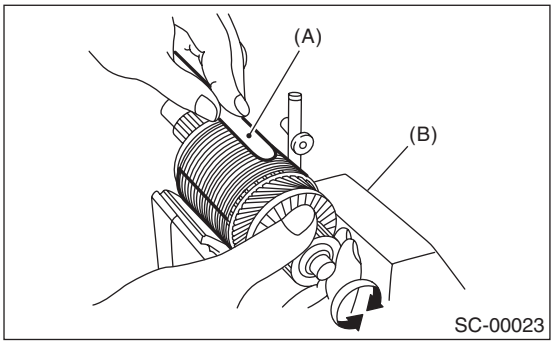

(A) Steel seat
(B) Growler tester

5) Armature ground test
Use a circuit tester to touch the probe of one side to the commutator segment, and the other probe to the shaft. If there is no continuity, it is normal. If there is continuity, the armature is grounded.
If grounded, replace the armature.

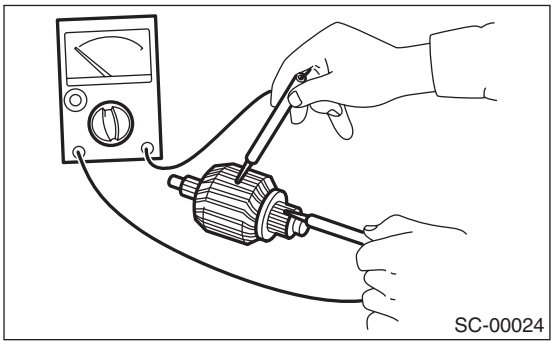

2. YOKE

Make sure that the pole is set at the predetermined position.

3. OVERRUNNING CLUTCH

Check that there is no wear or damage to the piston teeth. Replace if it is damaged. If it rotates smoothly when rotated in the correct direction (counter-clockwise) and does not return to the other direction, it is normal.

CAUTION:
To prevent spilling of grease, do not clean the overrunning clutch with oil.

4. BRUSH AND BRUSH HOLDER

1) Brush length
Measure the length of the brush. If it exceeds service limits, replace it.
Replace if there is abnormal wear or cracks.

Brush length:
Standard
12.3 mm (0.484 in)
Service limit
7.0 mm (0.276 in)

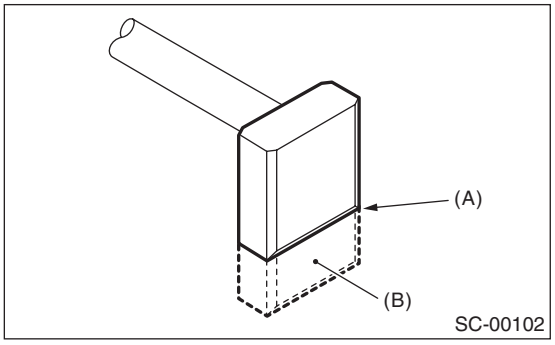

(A) Service limit line
(B) Brush

2) Brush movement
Check that the brush moves smoothly in the brush holder.
3) Brush spring force
Measure the brush spring force with a spring scale.
Replace the brush holder if below the service limit.

Brush spring force:

Standard
Except for turbo MT model and STI model
15.9 — 19.5 N
(1.62 — 1.99 kgf, 3.57 — 4.38 lbf) (When new)
Turbo MT model and STI model
21.6 N (2.2 kgf, 4.9 lbf) (When new)

Service limit
Except for turbo MT model and STI model
2.5 N (0.25 kgf, 0.56 lbf)
Turbo MT model and STI model
5.9 N (0.6 kgf, 1.3 lbf)

5. SWITCH ASSEMBLY

Using a circuit tester (set to “ohm”), check that there is continuity between terminals S and M, and between terminal S and ground.
Also check to be sure there is no continuity between terminal M and B.

Terminal/Resistance:
S — M/1 Ω or less
S — Ground/1 Ω or less
M — B/1 MΩ or more

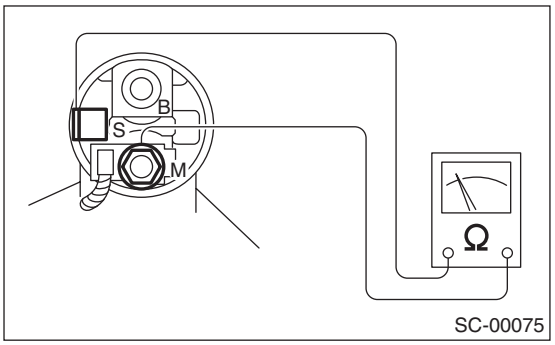

6. SWITCH ASSEMBLY OPERATION

1) Using a lead wire, connect the terminal S of switch assembly to positive terminal of battery, and starter body to ground terminal of battery. The pinion should be forced endwise on shaft.

NOTE:
With the pinion forced endwise on shaft, starter motor can sometimes rotate because current flows, through pull-in coil, to motor. This is not a problem.
2) Disconnect the connector from terminal M. Then using a lead wire, connect the positive terminal of battery and terminal M and ground terminal to starter body.
In this test set up, the pinion should return to its original position even when it is pulled out with a screwdriver.

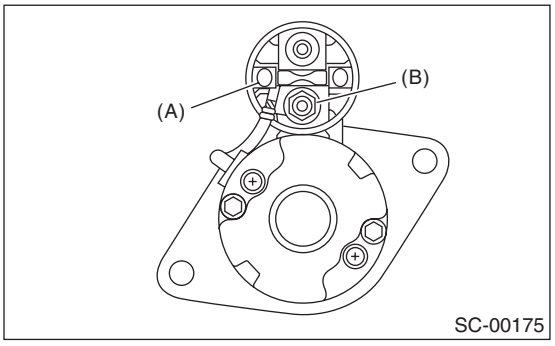

(A) Terminal S
(B) Terminal M

7. PERFORMANCE TEST

The starter should be submitted to performance tests whenever it has been overhauled, to assure its satisfactory performance when installed on the engine.
Three performance tests, no-load test, load test, and lock test, are presented here; however, if the load test and lock test cannot be performed, carry out at least the no-load test.
For these performance tests, use the circuit shown in figure.

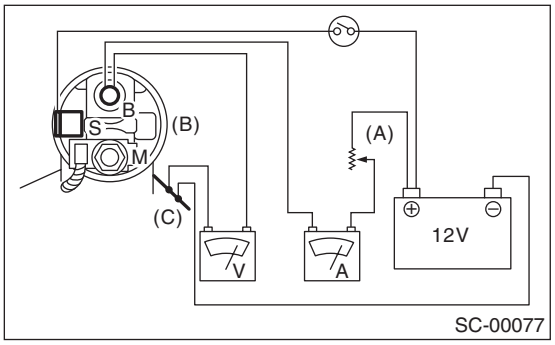

(A) Variable resistance
(B) Magnet switch
(C) Starter body

1) No-load test
With switch on, adjust the variable resistance until the voltage is 11 V, read the value of ammeter to measure starter speed. Compare these values with the standard.

No-load test (standard):

Voltage/Current
Non-turbo, MT model
Max. 11 V/95 A
Turbo MT model and STI model
Max. 11 V/90 A
AT model
Max. 11 V/90 A

Rotating speed
Non-turbo, MT model
2,500 rpm or more
Turbo MT model and STI model
2,860 rpm or more
AT model
2,000 rpm or more

2) Load test
Apply the specified braking torque to starter. The condition is normal if the current draw and starter speed are within standard.

Load test (standard):

Voltage/Load
Non-turbo, MT model
7.5 V/8.84 N·m (0.9 kgf-m, 6.5 ft-lb)
Turbo MT model and STI model
8 V/9.3 N·m (0.95 kgf-m, 6.9 ft-lb)
AT model
7.7 V/16.7 N·m (1.7 kgf-m, 12.3 ft-lb)

Current/Speed:
Non-turbo, MT model
300 A/870 rpm or more
Turbo MT model and STI model
280 A/860 rpm or more
AT model
400 A/710 rpm or more

3) Lock test
With the starter stalled, or not rotating, measure the torque developed and current draw when the voltage is adjusted to standard voltage.

Lock test (standard):

Voltage/Current
Non-turbo, MT model
4 V/680 A or less
Turbo MT model and STI model
5 V/515 A or less
AT model
3.5 V/960 A or less

Torque
Non-turbo, MT model
17 N·m (1.73 kgf-m, 12.5 ft-lb) or more
Turbo MT model and STI model
16 N·m (1.63 kgf-m, 11.8 ft-lb) or more
AT model
31 N·m (3.16 kgf-m, 22.9 ft-lb) or more